ECO LASER

www.or-laser.com

The perfect entrance

Cost-efficient laser welding system for
small series and individual parts

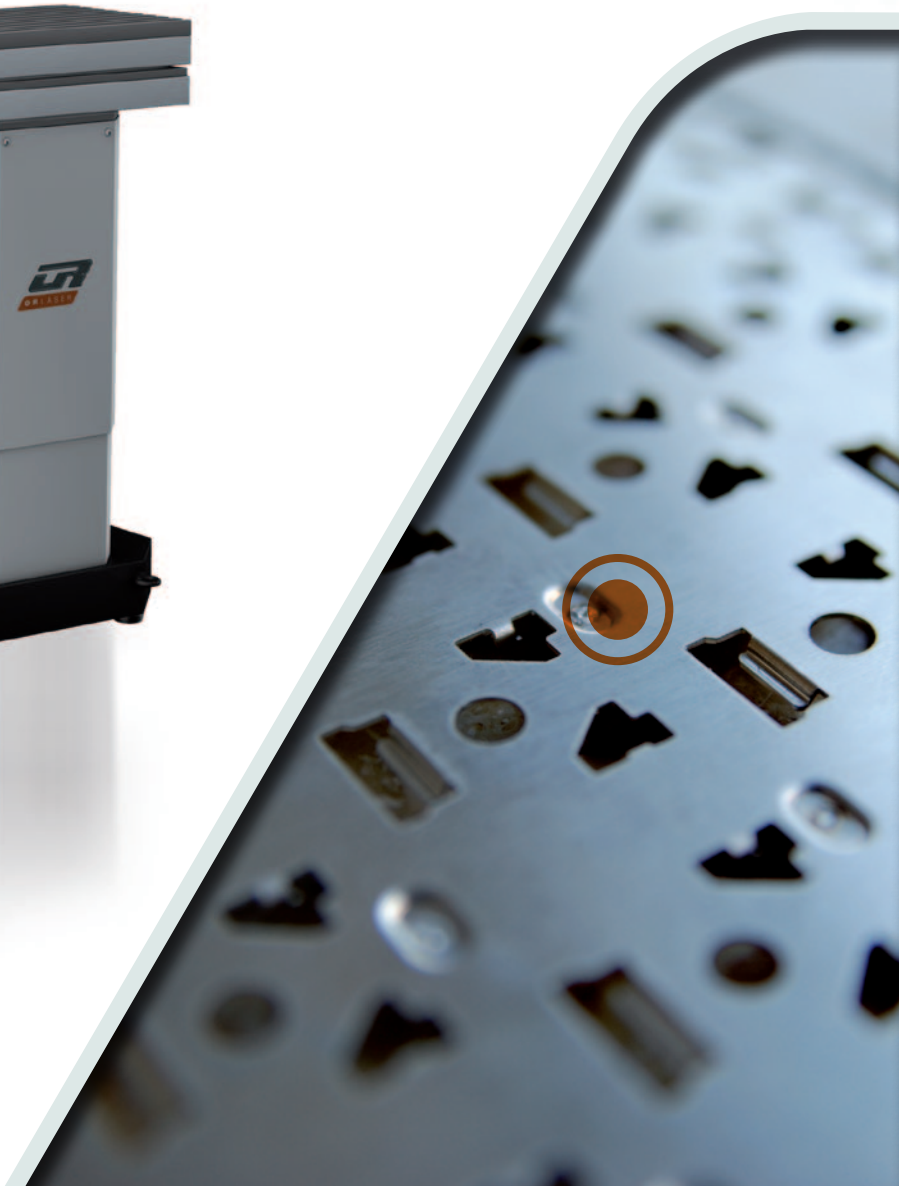

ORLASER

Various industries, always ready for use: ECO LASER

Electronics

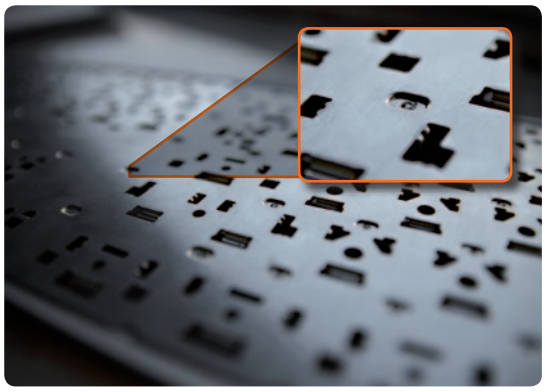

Point welding of keyboards

Tool and die making

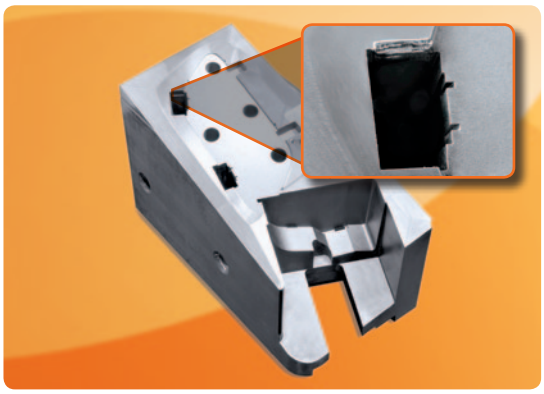

Die insert injection molding tool

Medical technology

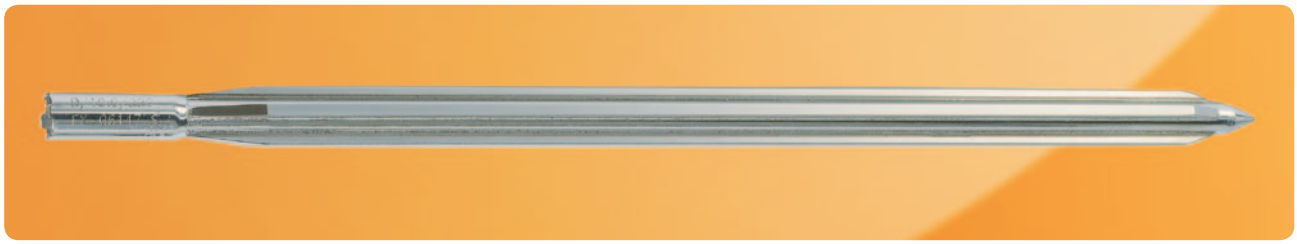

Implants for invasive transplants

Aviation engineering

Engine components for military
and civil aviation

Mechanical engineering

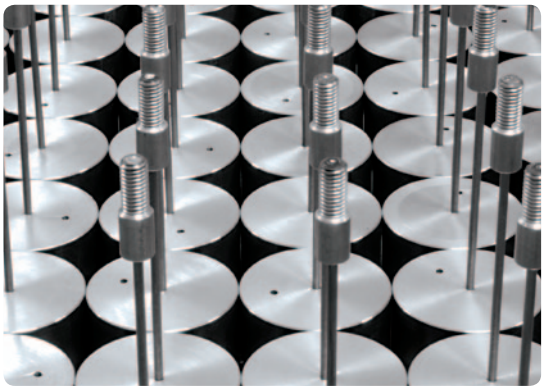

Machine parts with complex alloys

Cost effectiveness meets ergonomic design

The rising demand for inexpensive laser welding solutions for very small series or individual parts motivated us to develop a new laser welding system for individual needs. In addition to our own practical experience, we also implemented suggestions from our customers.

The practically-oriented operation of the laser welding system offers sufficient user comfort for efficient laser welding. Continue reading to learn about all the new developments and form your own opinion.

Dimensions: width 472 x height 1270 x length 1160 mm
Weight: 190 kg net

ECO LASER system. Uncompromisingly cost-efficient

This new development offers an inexpensive introduction to laser welding, particularly for small-sized companies and young entrepreneurs who make their first steps in this field. Of course, this laser welding system is also suitable for experts who would like to expand their welding capacities. It is small and compact, can be quickly readied for use and is extremely precise in order to satisfy rising user requirements, such as in tool and die making. No compromises were made in the area of user comfort in particular. The motor-controlled table (x/y/z) with a carrying capacity of 150 kg allows axis-synchronous laser welding. This is also possible with 4 axes in connection with the motorised rotary axis.

Joystick

Always at hand and as individual as your working style. Along with the display, the joystick functions as the central operating element. It can be used directly for selecting and executing important functions. This increases the efficiency during laser welding since all laser parameters are directly modified via the joystick.

Higher performance per AUTOFOCUS system **(OPTIONAL)**

The welding capabilities can be further improved with the AUTOFOCUS system. This optional expansion allows the automated adaptation of the working distance during welding. This automatically corrects for small shape deviations, allowing consistent weld seam quality.

360° rotating optics and telescoping extension are additional optional expansions that make the ECO LASER from O.R. Lasertechnology GmbH an even more efficient laser welding system.

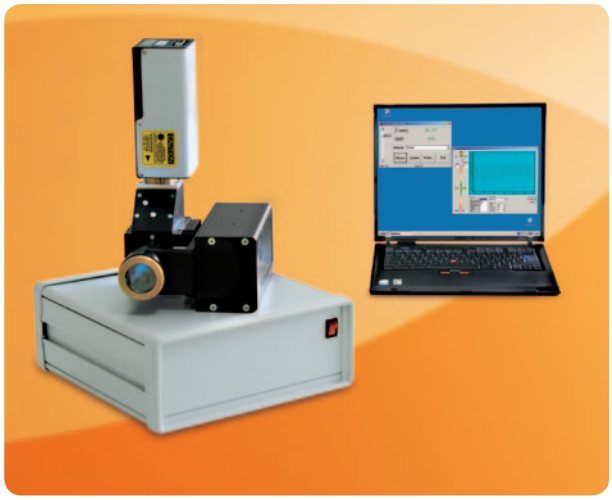

Highlights

- Work faster and more precise with an increase in productivity of up to 50%
- Automatic online focussing
- Accurate and rapid operating mode
- Coaxial distance regulation
- Measuring accuracy at 15 µm
- Fast and precise work
- 750 Hz scanning rate

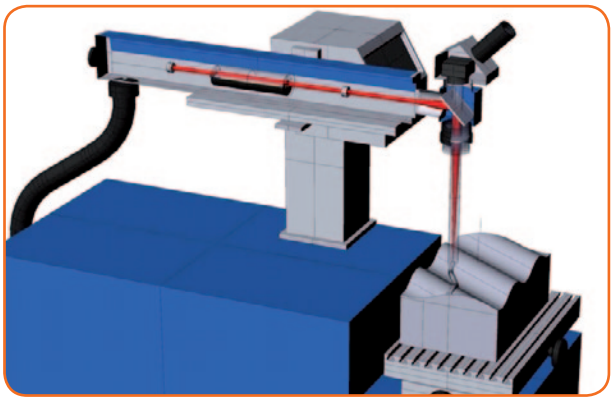

Mode of operation

A laser beam of a wavelength of 655 mm is coaxially coupled in the processing laser. The radiation reflected back from the workpiece is absorbed by the sensor at a scanning rate of 750 Hz and evaluated by means of interferometry. The distance so determined is transmitted in form of a digital signal and processed in a computer controlled manner. A controller regulates the drive of the lens positioning at a precision rate of up to 50 µm.

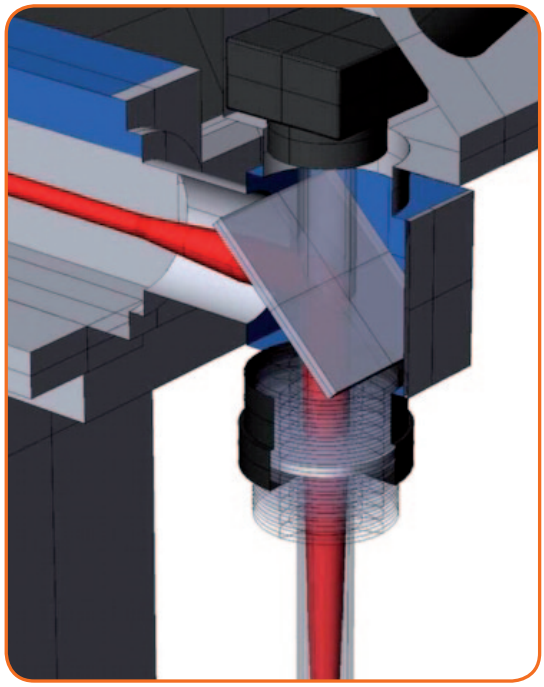

Functional principle of the AUTOFOCUS

Innovative display

The laser system is intuitively operated via a 5" touchscreen display. All important parameters are clearly arranged, and the most important functions can be reached with a touch of a finger. In addition, all technical parameters can be stored and recalled again when needed.

Useful accessories

For the ECO LASER system we offer a whole range of accessories to facilitate your work.

Magnetic ball

The ideal accessory for simple handling of your welding parts.

Rotating device

Rotating device with fully adjustable 3-Jaw chuck, 90° tilting and 360° swivel makes working on tools quick and easy.

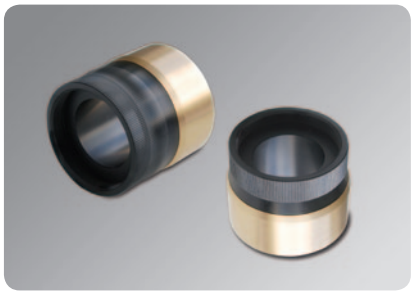

Telescope optics

The telescopic extension allows continuous real time changes in focal positions up to 20 mm.

Not enough? We will be happy to send you the current accessories catalogue by e-mail or post.

Technical data

Power

	Typ: ECO 2600	Typ: ECO 3300	Typ: ECO 4600	Typ: ECO 6400
Lasertype	Nd: YAG	Nd: YAG	Nd: YAG	Nd: YAG
Max. mean power	100 W	120 W	160 W	200 W
Pulse peak power	3,5 kW	6 kW	7,5 kW	9 kW
Max. pulse energy	60 J	70 J	80 J	100 J
Pulse duration	0,4 - 20 ms	0,4 - 20 ms	0,4 - 20 ms	0,4 - 20 ms
Pulse frequency	0,5 - 20 Hz	0,5 - 20 Hz	0,5 - 20 Hz	1 - 20 Hz (100 Hz)
Focus diameter	0,2 - 2,0 mm	0,2 - 2,0 mm	0,2 - 2,0 mm	0,2 - 2,0 mm
Line voltage (V/Ph/Hz)	240 / 1 / 50 - 60	400 / 3 / 50 - 60	400 / 3 / 50 - 60	400/3/50
Line voltage (V/Ph/Hz)	US 110 / 1 / 50 - 60			

System equipment

Laser system

- Laser resonator inclusive resonator mechanics
- Pump chamber
- Laser rod
- Cavity
- Resonator mirror
- Safety shutter
- Beam extension
- Power supply including circuit breaker
- Power disconnecting switch
- Emergency stop switch
- Motor protection switch
- Extra low voltage power supply 24 VDC
- Interface with hardware monitoring function
- Lamp switch
- Industry controller for setting and display of power, pulse duration, pulse frequency with external trigger via foot switch
- Capacitor bank
- Internal water-air cooling system

Processing optics

- Variable beam expansion
- Beam deflection
- Safety glass
- LCD anti-glare
- Binoculars 10x
- Focussing lens

Linear system

- 4-axis controller
- Operation via joystick
- Traverse range z-axis: 400 mm (table)
- x-y axis for working table with stepper motor
- Positioning speed 0,5 - 15 mm/s
- Travel: x-axis: 200 mm / y-axis: 120 mm
- LED lightening
- Inert gas supply directly controlled via magnetic valve

Dimensions and weight

Dimensions: width 472 mm x height 1270 mm x length 1160 mm
Weight: 190 kg net

EVO MOBILE

www.or-laser.com

Open to more flexibility

Mobile and compact laser welding system
for open laser workstations

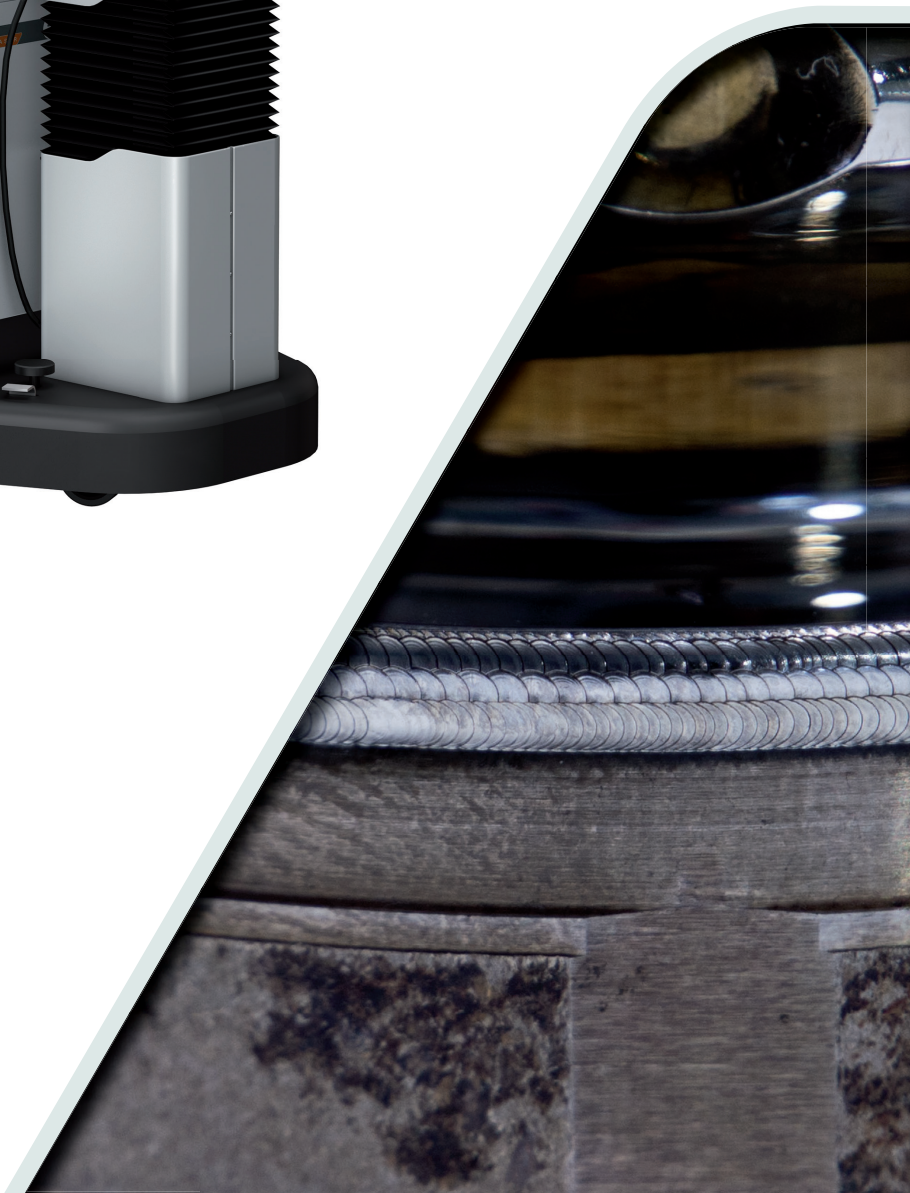

ORLASER

Various industries, always ready for use: EVO MOBILE

Electronics

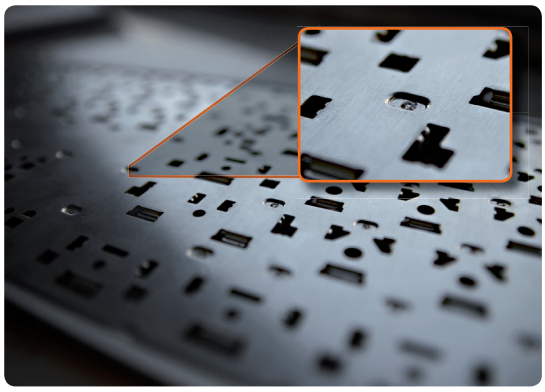

Point welding of keyboards

Tool and die making

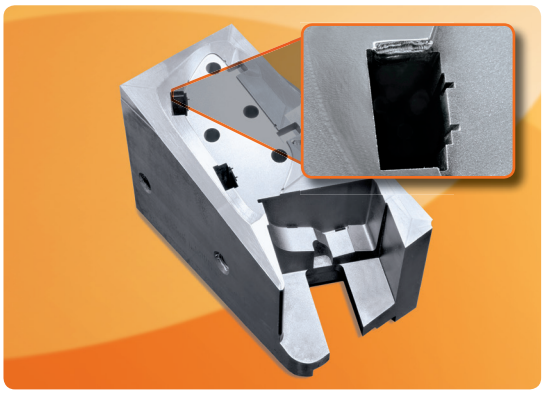

Die insert injection molding tool

Medical technology

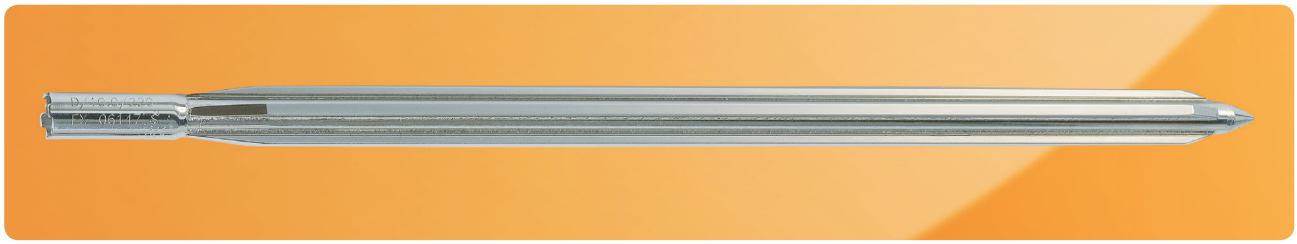

Implants for invasive transplants

Aviation engineering

Engine components for military
and civil aviation

Mechanical engineering

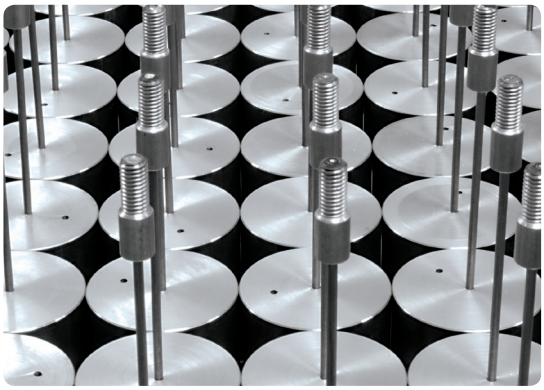

Machine parts with complex alloys

The EVO MOBILE laser system

Inspirations of our customers and several years of development led to a complete redevelopment of this laser welding system. The result is a mobile laser welding system that sets new standards for open laser workstations.

In addition to the comfortable operating features, designed with practical use in mind, a wide range of innovations support semiautomatic processing. Continue reading to learn about all the new developments and form your own opinion.

Technical specifications

Laser

- Newly developed resonator
- Modular components reduce maintenance times

Quality assurance

- Recording of video for analysis and monitoring
- USB/Ethernet connection for saving data for quality assurance and verification
- Optional memory expansion
- Additional history log of the welding parameters used

Control

- Intuitive operation
- 10“ touchscreen color display
- Relevant welding parameters and data at a glance
- Multi-lingual/multi-user (German, English and many more)
- Freely programmable pulse shapes (up to 4 shapes per pulse sequence – meaning optimal adaptation of the pulse to the material being processed)
- Saving of data via USB
- Removable operating element

The added plus

Numerous useful aids are integrated for improving productivity. For example, the auto weld function allows the learning of geometric figures (points, circles, polygons) and the further processing of these surfaces with predefined welding parameters. This allows for a significant increase in productivity.

Another innovation is the option of rotating the coordinate system freely in space. This offers the user the ability to define an inclined plane in space as the processing surface, making welding significantly simpler for the user.

Completely new processing capabilities

This new development has produced a laser system that sets new standards in the area of processing options. Small and compact but still with large traverse distances, it can be quickly readied for use and is extremely precise in order to meet the rising requirements of users such as service providers or tool and die makers.

The electromagnetically-controlled swivel arm can be extended like a telescope from 800 to 1500 mm and swiveled around its own axis. The traverse distance of the controlled axes is 700 mm in the x-axis and 400 mm in the y-axis. Vertically, the laser system can also traverse 400 mm in the z-axis. In other words, every laser welding process can be performed without constant repositioning or readjusting of the axes.

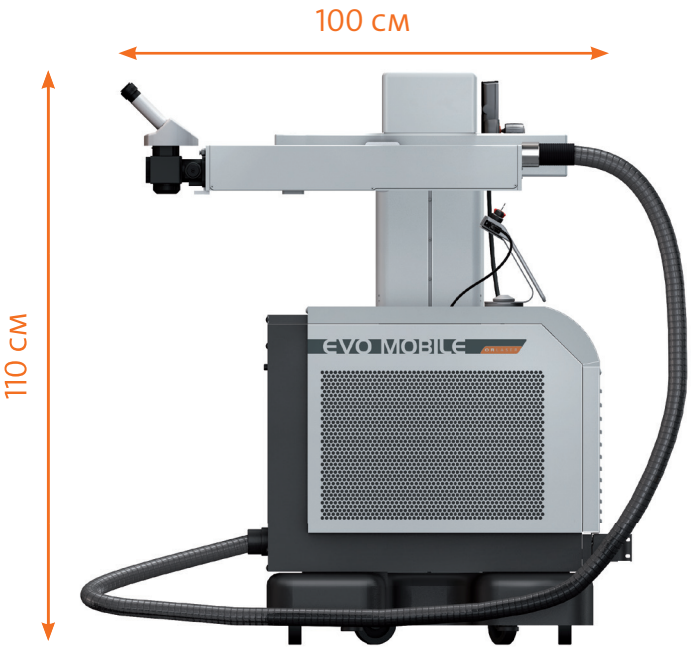

Ultra compact

The compact height of only 110 cm also allows for easy transport of this fully mobile laser system in a a mini van or small truck and is setting new standards by significantly extending the reach compared to previous laser systems.

The laser beam is directed to the welding position within the realm of millimeter precision. The minimal setup and takedown time as well as the long axis traverse distances of the EVO Mobi le minimizes the total amount of work when processing tools and dies.

Ultra flexible

The EVO Mobile is extremely easy to use and can be held in a stationary position with the stabilization brakes. Movement of the axes allows for very long traverse distances and is also controlled via the joystick. This allows the welding position to be set with absolute precision down to 0.1 mm. With optical extensions and 360° swivel optics capabilities, no angle will remain hidden.

Control via touchscreen

Via the 10“ touch display all parameters are accessible and there are reams of possibilities to adjust important settings which can also be stored directly. Saved data can be accessed anytime.

EXAMPLES:

Laser parameters
Configured easily and accurately.

Pulse shaping
Program the ideal setting.

Video
1:1 tracking of the welding process and saved along with all technical parameters.

Motion
Welding line determination, r-axis.

One-hand operation via joystick

Along with the display, the joystick functions are the central operating element. Traverse speed, axis direction and more can be controlled and executed with the joystick directly. This increases efficiency during welding since modifications can be made directly during the welding process rather than only via the display. Path data can also be programmed directly with the joystick.

Teach
Simple teaching of geometries in 3D

Menu
Change all system parameters intuitively with a single click

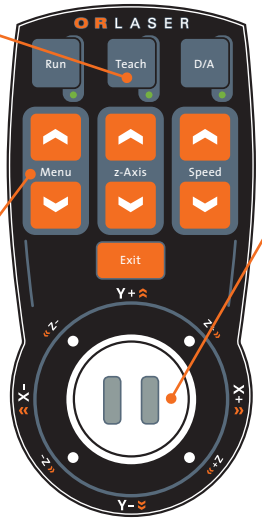

Move
Move in the x, y, z-axes or navigate with the laser menu control

Welding made easy thanks to coordinate transformation

While repair or welding of large and bulky shapes used to be a considerable challenge even for experienced welders, the EVO laser welding systems with the innovative coordinate transformation now provides the perfect solution. Surfaces and edges which are not parallel to the axis can now be processed easily.

The coordinate axes are defined by three points, and with simple operation of the joystick in one direction, the EVO laser welding system executes synchronized movement of all three axes parallel, for example, to the mold edge. The result is optimal and manual focusing and re-adjustments are no longer required.

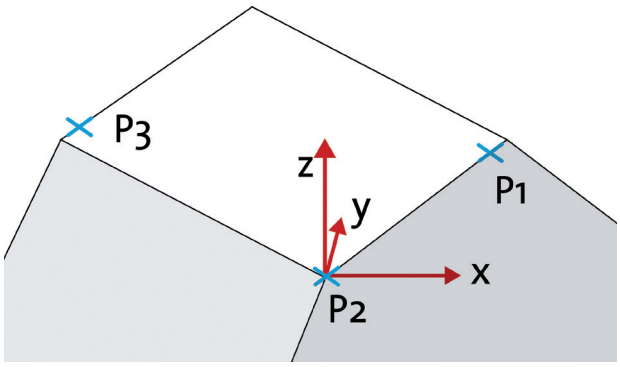

Save the new coordinate system using 3 points

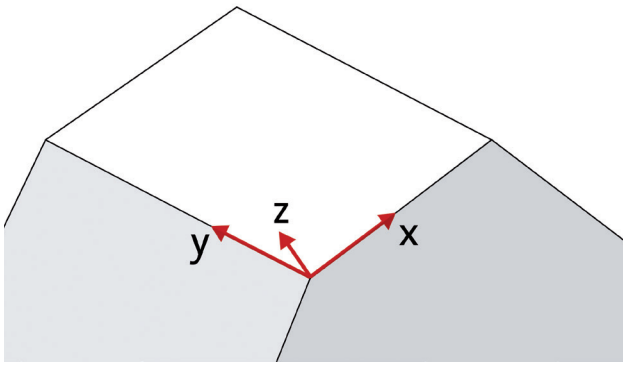

New coordinate system adapted to the workpiece

Useful accessories

For the EVO MOBILE system we offer a whole range of accessories to facilitate your work.

Magnetic ball

The ideal accessory for simple handling of your welding parts.

Rotating device

Rotating device with fully adjustable 3-Jaw chuck, 90° tilting and 360° swivel makes working on tools quick and easy.

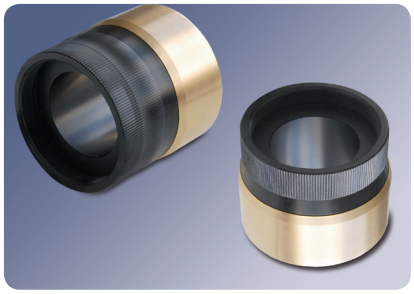

Telescope optics

The telescopic extension allows continuous real time changes in focal positions up to 20 mm.

Not enough? We will be happy to send you the current accessories catalogue by e-mail or post.

Technical data

Power

	Typ: 120 W	Typ: 160 W	Typ: 200 W	Typ: 300 W
Lasertype	Nd: YAG	Nd: YAG	Nd: YAG	Nd: YAG
Max. mean power	120 W	160 W	200 W	300 W
Pulse peak power	6 kW	7,5 kW	9 kW	13 kW
Max. pulse energy	60 J	80 J	100 J	150 J
Pulse duration	0,4 – 20 ms	0,4 – 20 ms	0,4 – 20 ms	0,4 – 20 ms
Pulse frequency	1 – 20 Hz (100 Hz)	1 – 20 Hz (100 Hz)	1 – 20 Hz (100 Hz)	1 – 20 Hz (100 Hz)
Focus diameter	0,2 – 2,0 mm	0,2 – 2,0 mm	0,2 – 2,0 mm	0,2 – 2,0 mm
Line voltage (V/Ph/Hz)	400/3/50	400/3/50	400/3/50	400/3/50

System equipment

Laser system

- Laser resonator inclusive resonator mechanics
- Laser rod
- Cavity
- Resonator mirror
- Safety shutter
- Beam expansion
- Mains supply including mains fuse
- Mains isolator
- Emergency stop
- Motor circuit breaker
- Low voltage power supply 24 VDC
- Interface with hardware monitoring function
- Lamp switch
- Industry controller for setting and display of power, pulse duration, pulse repetition frequency with external trigger via footswitch
- C-bank
- Water/air cooling system

Processing optics

- Variable beam expansion
- Beam deflection
- Safety glass
- LCD anti-glare
- Binoculars 10x
- FocusSing lens

Operating unit

- Integrated control with 10" TFT display
- One-hand operation of all functions via joystick/touchpad
- Simple coordinates transformation
- Teach-in and synchronisation for forward feed and laser
- Circle and continuous path control with pulse synchronisation

Linear system

- z-axis for mounting the resonator
- Swiveling unit for resonator for the motor-controlled welding of large molds
- Operation via joystick
- Shielding gas supply direct
- Traverse range z-axis: 570 mm controlled via solenoid valve
- x-y axis for positioning the resonator
- Positioning speed 0.5 – 15 mm/s
- Stable construction made of aluminum sections adjustale via step motors with powder-coated steel plate covers
- Massive steel substructure mounted on heavy duty rollers
- Traverse range: x-axis: 700 mm / y-axis: 400 mm
- LED lighting

Dimensions and weight

Dimensions: width 950 x height 1550 x length 1250 mm
Weight: 370 kg net